# BF591 EXPLODED VIEW

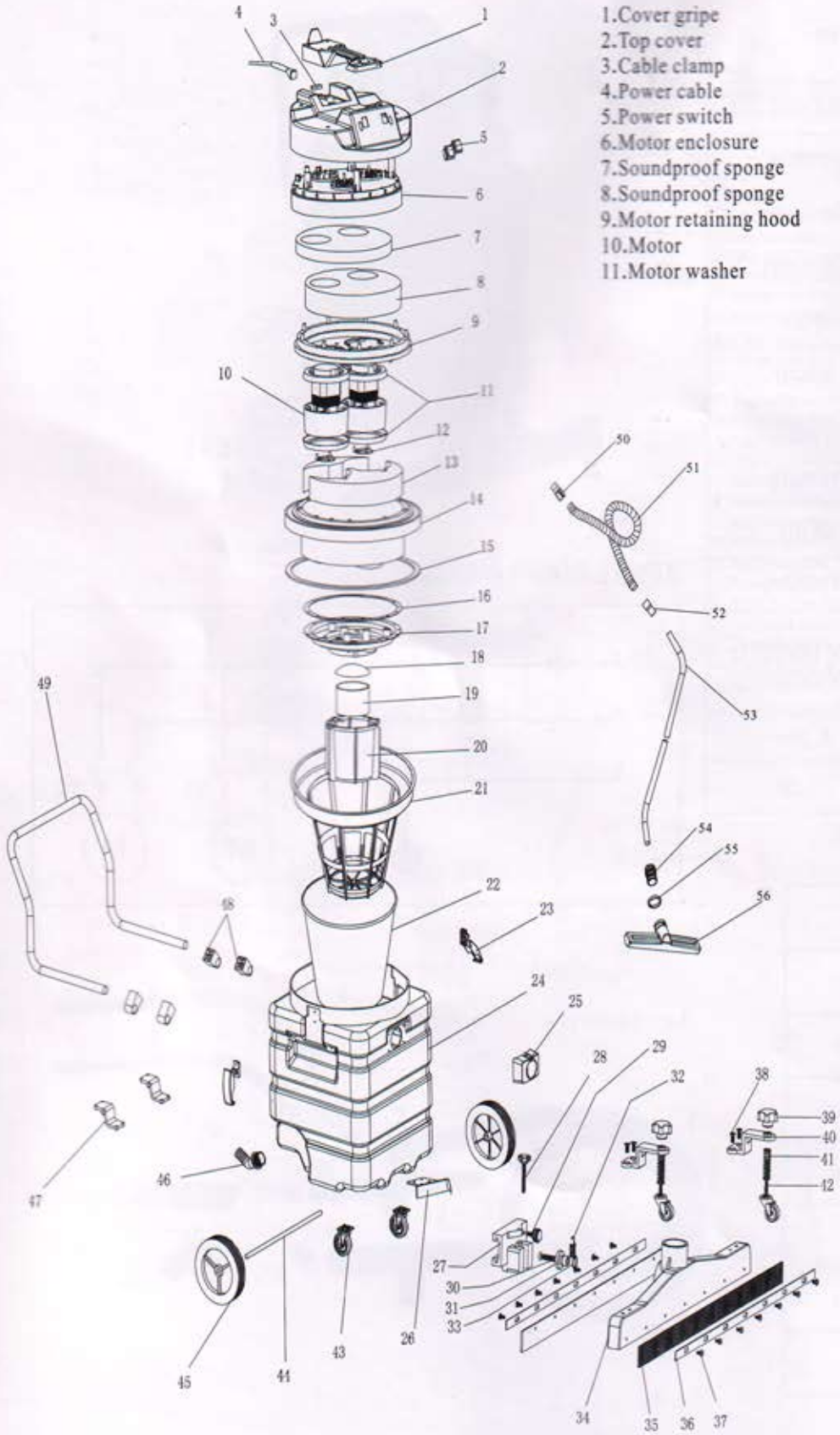

1.Cover gripe
2.Top cover
3.Cable clamp
4.Power cable
5.Power switch
6.Motor enclosure
7.Soundproof sponge
8.Soundproof sponge
9.Motor retaining hood
10.Motor
11.Motor washer
12.3-pin pad
13.Sponge
14.Retaining base
15.Retaining base washer
16.Lock ring
17.Float cage holder
18.Float cap
19.Float
20.Float cage
21.Filter bag rack
22.Filter bag
23.Tank clip
24.Plastic tank
25.Square hose holder
26.Nozzle linking bracket
27.Nozzle connector
28.Hand screw A
29.Hand screw B
30.Sunk inner hex screw
31.Lock pin
32.Spring
33.Circlip
34.Rubber strip holder
35.Rubber strip
36.Metal fixing bar
37.Tapping screw
38.Sunk screw
39.Knob nut
40.Castor bracket
41.Castor spring
42.Castor set
43.Swivel castor
44.Wheel axle
45.Rear wheel
46.Hose connector
47.Fixing bracket
48.Handle retainer
49.Handle sleeve
50.Short hose connector
51.Suction hose
52.Long hose connector
53.Metal tube
54.Lock screw-hoop
55.Circlip
56.Dry intake nozzle