Razor SV 17

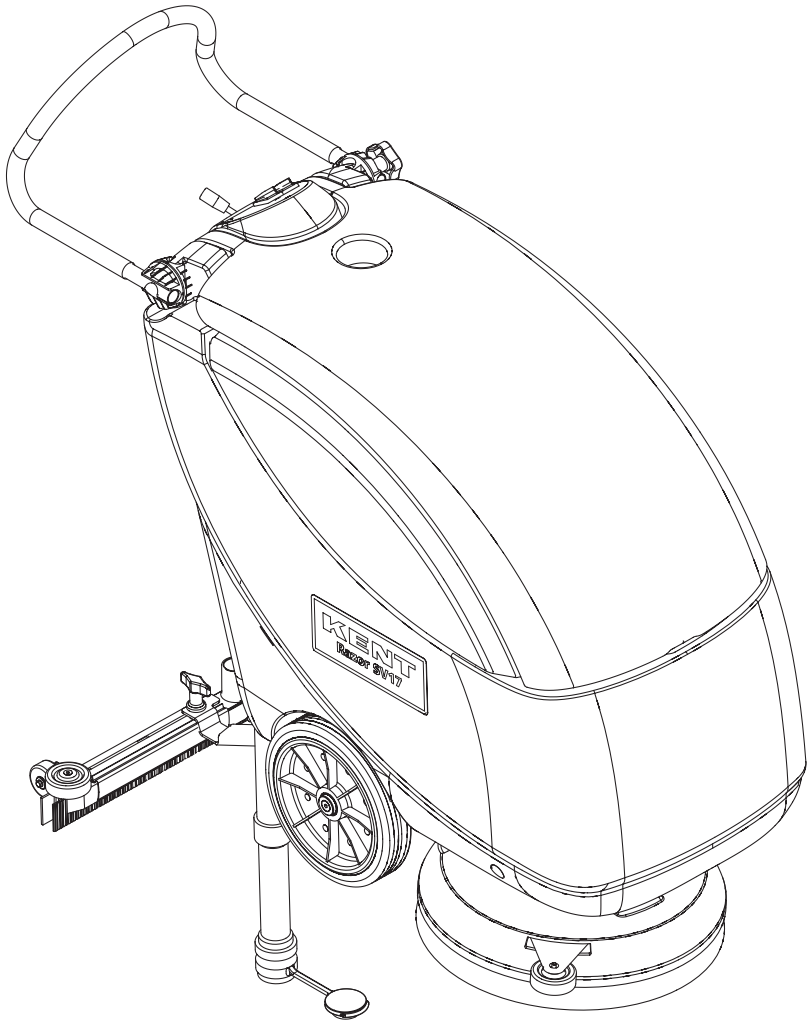

PARTS LIST
KENT MODEL: 908 7112 020

KENT
Simple. Clean.

909 6310 000(1)2005-12

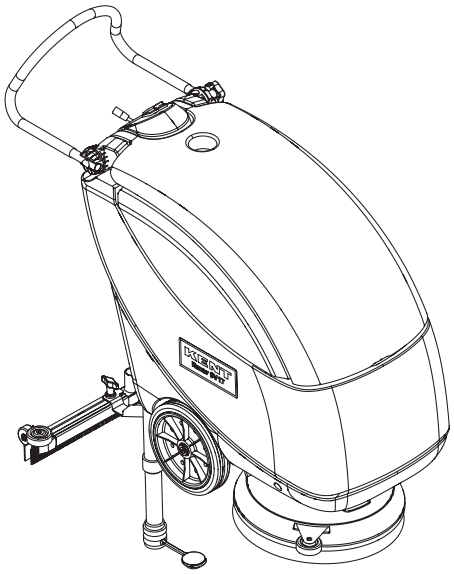

DESCRIPTION	PLAN
SOLUTION TANK	2-3
VACUUM SYSTEM	4-5
RECOVERY TANK	6-7
HANDLE ASSEMBLY	8-9
CONTROL PANEL ASSEMBLY	10-11
SOLUTION SYSTEM	12-13
SQUEEGEE ASSEMBLY	14-15
BRUSH SYSTEM	16-17
WIRING SYSTEM	18-19
ACCESSORIES	20-23
RECOMMENDED SPARE PARTS	24
WIRING DIAGRAM	25

WHEN ORDERING PARTS

* Use the 8, 9 or 10 digit numbers from the “Ref. No.” columns in this parts list.
* Specify the model and serial number of the machine.
* Use the space below to record the model and serial number for future reference.

Model _____ Serial No. _____

**** = Optional***
 # = Modified item No. or New item No.
[] = Not shown
xxxxxx= Contained in a Kit

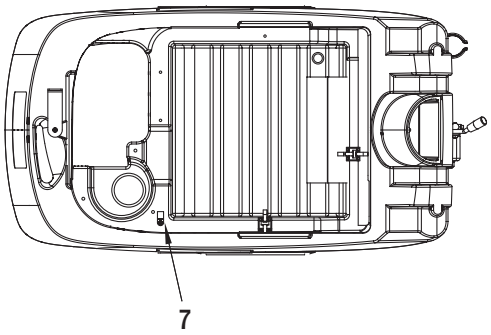
7

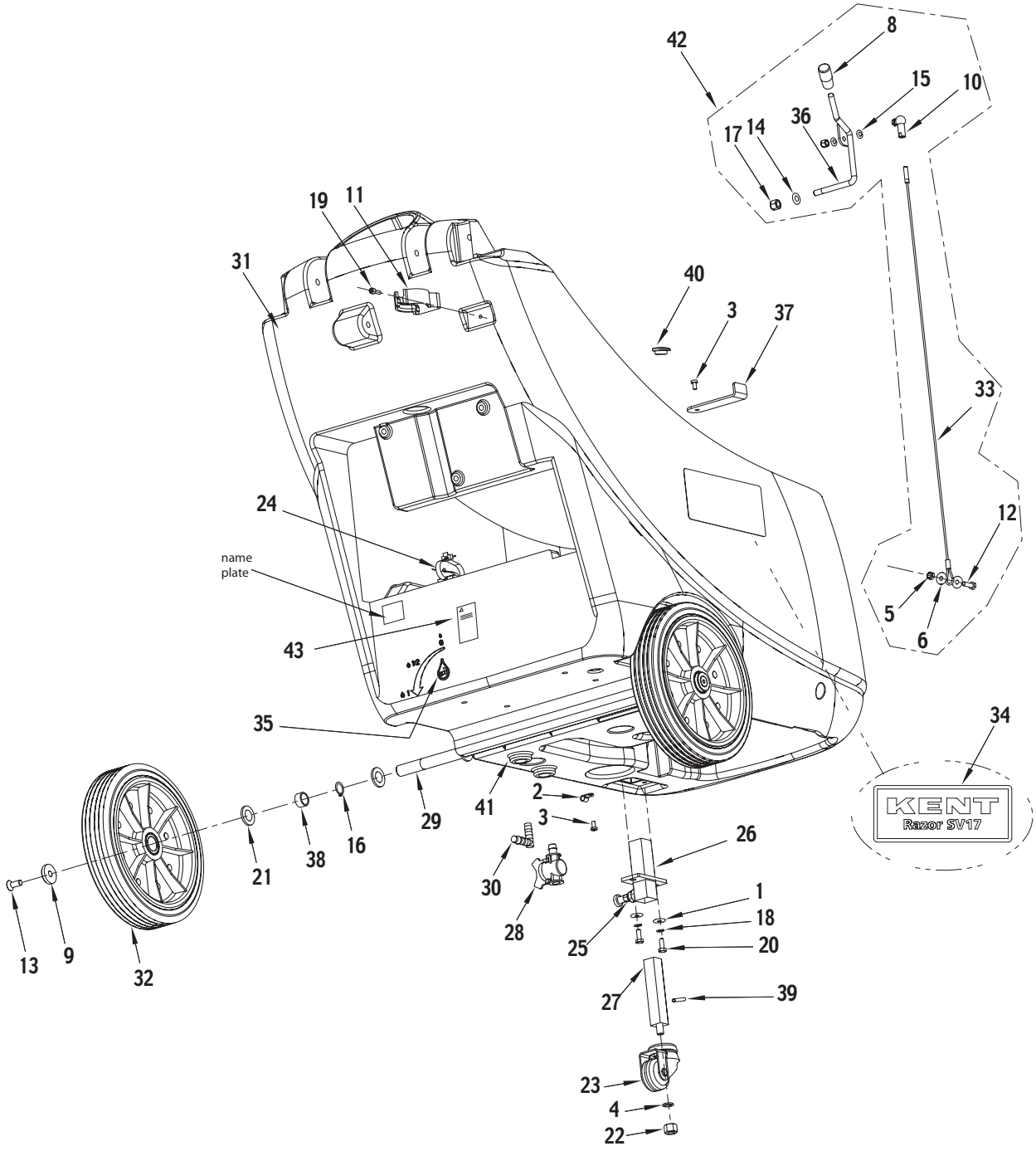
42
8
15
10
36
17
14
19
11
31
40
3
37
33
24
12
name plate
5
6
43
35
34
KENT
Razor SV17
2
41
29
3
26
16
38
21
30
1
18
28
25
20
13
9
32
27
39
23
4
22

Item No.	Ref. No.	Qty	Description
1	xxxxxxxx	2	Washer flat 6X18 (Solution tank hardware kit)
2	xxxxxxxx	1	Clamp (Solution tank hardware kit)
3	xxxxxxxx	6	Screw M5X10 (Solution tank hardware kit)
4	08603258	1	Washer flat 11X16
5	xxxxxxxx	1	Nut hex. low self lock M6 SS (Kit squeegee lift cable)
6	xxxxxxxx	2	Washer flat 6X18 SS (Kit squeegee lift cable)
7	08603845	1	Cable clamp
8	xxxxxxxx	1	Knob (Kit squeegee lift cable)
9	08812392	2	Spacer
10	xxx xxxx xxx	1	Ball joint (Kit squeegee lift cable)
11	xxxxxxxx	1	Hose clamp (Solution tank hardware kit)
12	xxx xxxx xxx	1	Screw hex hd M6X20 SS (Kit squeegee lift cable)
13	xxx xxxx xxx	2	Screw M8X20 (Solution tank hardware kit)
14	xxx xxxx xxx	1	Washer flat 8X17 (Kit squeegee lift cable - Solution tank hardware kit)
15	xxx xxxx xxx	2	Washer flat 6X12,5 (Kit squeegee lift cable - Solution tank hardware kit)
16	xxx xxxx xxx	2	Retaining ring (Solution tank hardware kit)
17	xxx xxxx xxx	1	Nut hex. self lock M8 (Kit squeegee lift cable - Solution tank hardware kit)
18	xxx xxxx xxx	2	Washer split (Solution tank hardware kit)
19	xxx xxxx xxx	1	Screw M5X12 (Solution tank hardware kit)
20	xxx xxxx xxx	2	Screw hex hd M6X16 (Solution tank hardware kit)
21	xxx xxxx xxx	6	Washer flat 16X30 (Solution tank hardware kit)
22	xxx xxxx xxx	1	Nut hex. self lock M10 (Solution tank hardware kit)
23	909 5560 000	1	Wheel
24	909 5606 000	2	Clamp
25	909 5641 000	1	Indexing plunger
26	909 5649 000	1	Support
27	909 5658 000	1	Supporting rod
28	909 5696 000	1	Valve
29	909 5748 000	1	Wheels shaft
30	909 5895 000	1	Elbow 90° ø10
31	909 6294 000	1	Solution tank
32	146 1899 000	2	Wheel
33	xxx xxxx xxx	1	Squeegee lifting cable (Kit squeegee lift cable)
34	xxx xxxx xxx	2	Decal KENT Razor SV17 (Kit decals)
35	xxx xxxx xxx	1	Decal ECO SOLUTION (kit decals)
36	xxx xxxx xxx	1	Squeegee lifting lever (Kit squeegee lift cable)
37	909 6304 000	1	Bracket brush support
38	xxx xxxx xxx	2	Spacer (Solution tank hardware kit)
39	909 6441 000	1	Pin 3X20
40	909 6236 000	1	Black cap
41	909 5286 000	2	Gasket
42	909 6437 000	1	Kit squeegee lift cable (5,6,8,10,12,14,15,17,33,36)
43	xxx xxxx xxx	1	Decal warning (kit decals)
[44]	909 6438 000	1	Solution tank hardware kit (1,2,3,11,13,14,15,16,17,18,19,20,21,22,38)

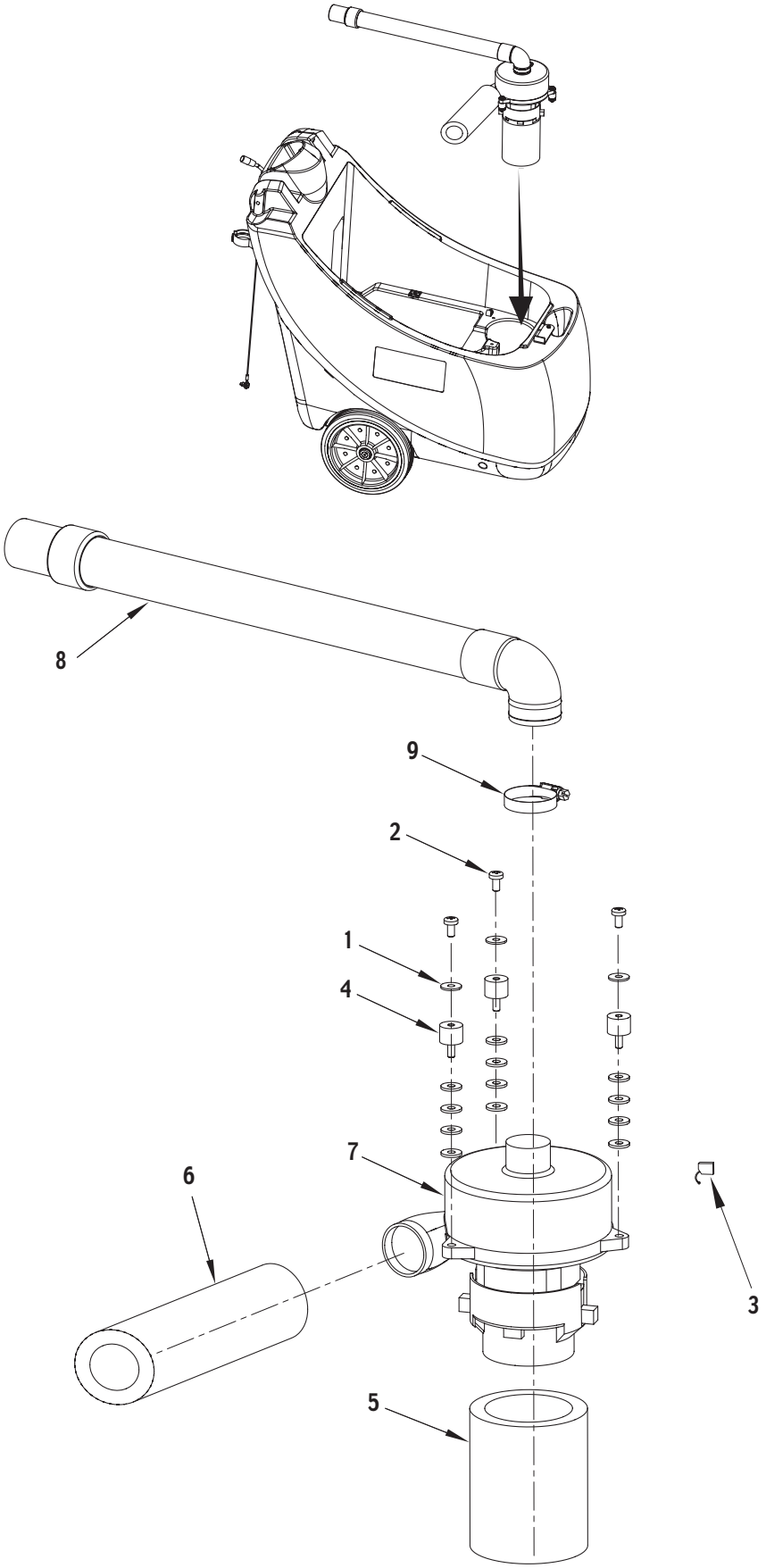
8
9
2
1
4
7
6
3
5

Item No.	Ref. No.	Qty	Description
1	xxxxxxxx	15	Washer falt 6x18 (Vacuum systems hardware kit)
2	xxxxxxxx	3	Screw cyl hd M6x12 (Vacuum systems hardware kit)
3	909 5371 000	2	Carbon brush
4	909 5198 000	3	Vibration damping M6
5	909 5564 000	1	Pipe acoustic insulation
6	909 5565 000	1	Pipe acoustic insulation
7	909 5713 000	1	Kit vacuum motor with connector
8	909 6290 000	1	Vacuum motor hose
9	146 0104 000	1	Hose clamp
[10]	909 5987 000	1	Vacuum systems hardware kit (1,2)

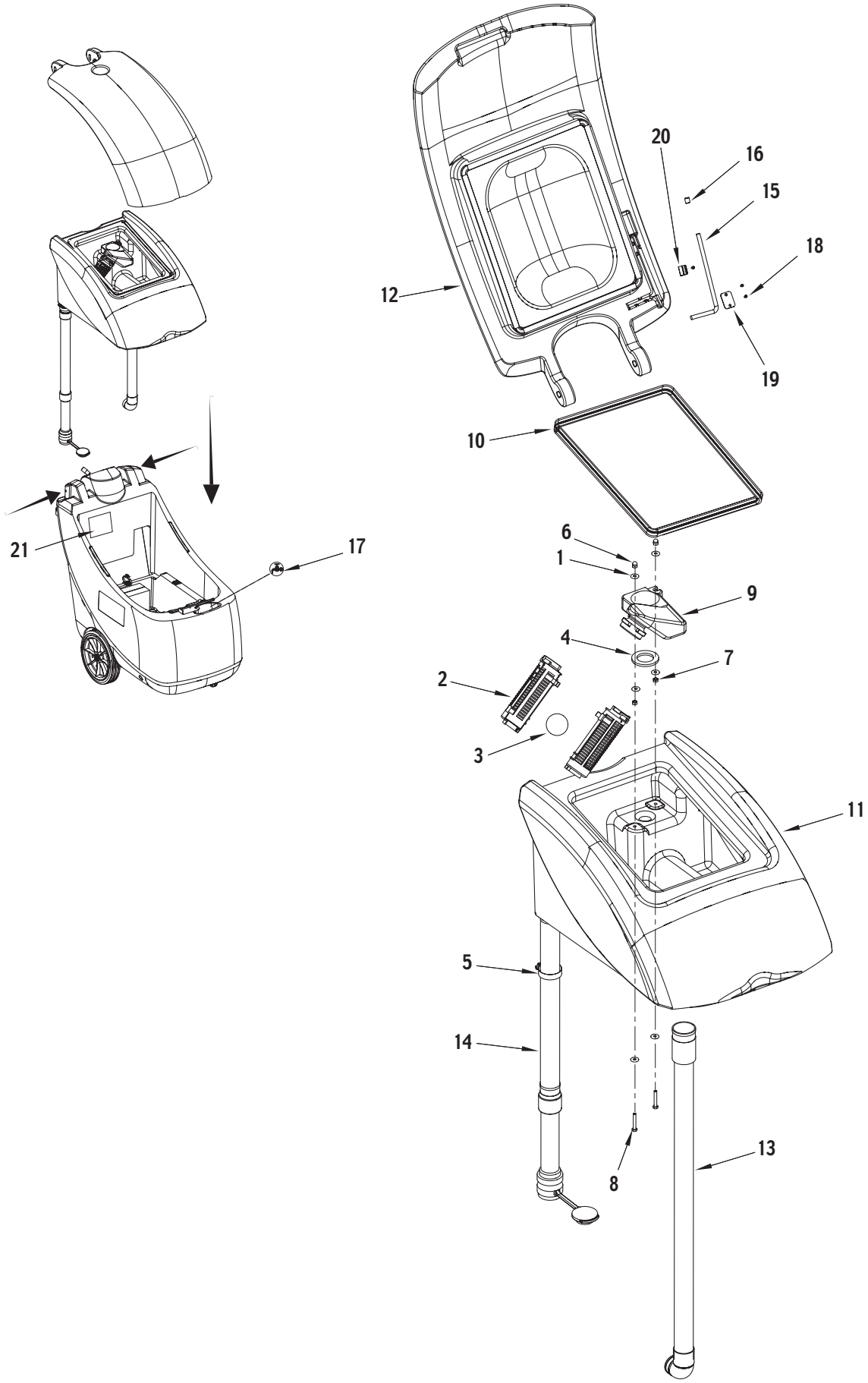
20
16
15
18
12
19
10
6
1
9
4
7
2
3
11
5
14
13
8
21
17

Item No.	Ref. No.	Qty	Description
1	xxxxxxxx	6	Washer flat 6X18 SS (Recovery tank hardware kit)
2	56324497	2	Float cage
3	56391690	1	Floating ball
4	08812968	1	Gasket
5	xxx xxxx xxx	1	Hose clamp 14/32-52 (Recovery tank hardware kit)
6	xxx xxxx xxx	2	Nut cap M6 SS (Recovery tank hardware kit)
7	xxx xxxx xxx	2	Nut hex M6 SS (Recovery tank hardware kit)
8	xxx xxxx xxx	2	Screw hex hd M6X40 SS (Recovery tank hardware kit)
9	909 6199 000	1	Holder, float cage
10	909 6268 000	1	Gasket 1370 mm
11	909 6272 000	1	Recovery tank
12	909 6273 000	1	Tank cover
13	909 6301 000	1	Vacuum hose
14	08812869	1	Drain hose
15	909 6276 000	1	Lever for fixing cover
16	08603935	1	Black cap
17	xxx xxxx xxx	1	Decal water faucet (kit decals)
18	145 1756 000	3	Screw 2,9X9,5 SS
19	909 6473 000	1	Lever fixing plate
20	909 6575 000	1	Lever fixing clamp
21	xxx xxxx xxx	1	Decal batteries (kit decals)
[22]	909 5988 000	1	Recovery tank hardware kit (1,5,6,7,8)

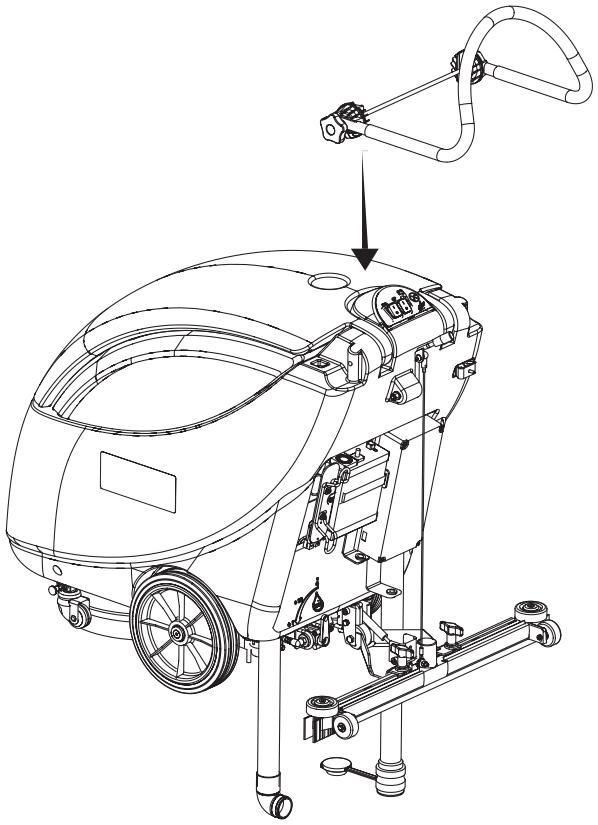

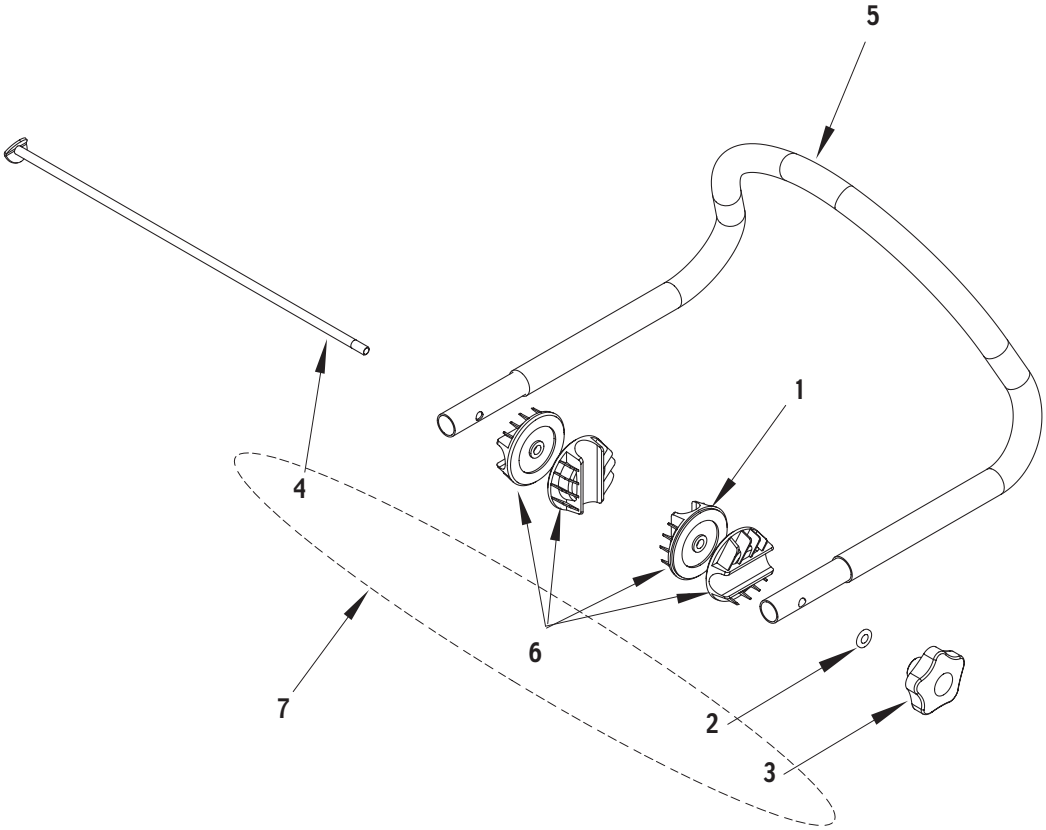
5
1
4
6
7
2
3

Item No.	Ref. No.	Qty	Description
1	xxxxxxxx	4	Ratchet handle adjuster (Handle adjuster kit)
2	xxx xxxx xxx	1	Washer flat 8X17 (Handle adjusting kit)
3	xxx xxxx xxx	1	Knob (Handle adjusting kit)
4	xxx xxxx xxx	1	Pivot, handle bar (Handle adjusting kit)
5	909 6274 000	1	Handle bar
6	909 5099 000	1	Handle adjuster kit (1)
7	909 5701 000	1	Handle adjusting kit (2,3,4,6)

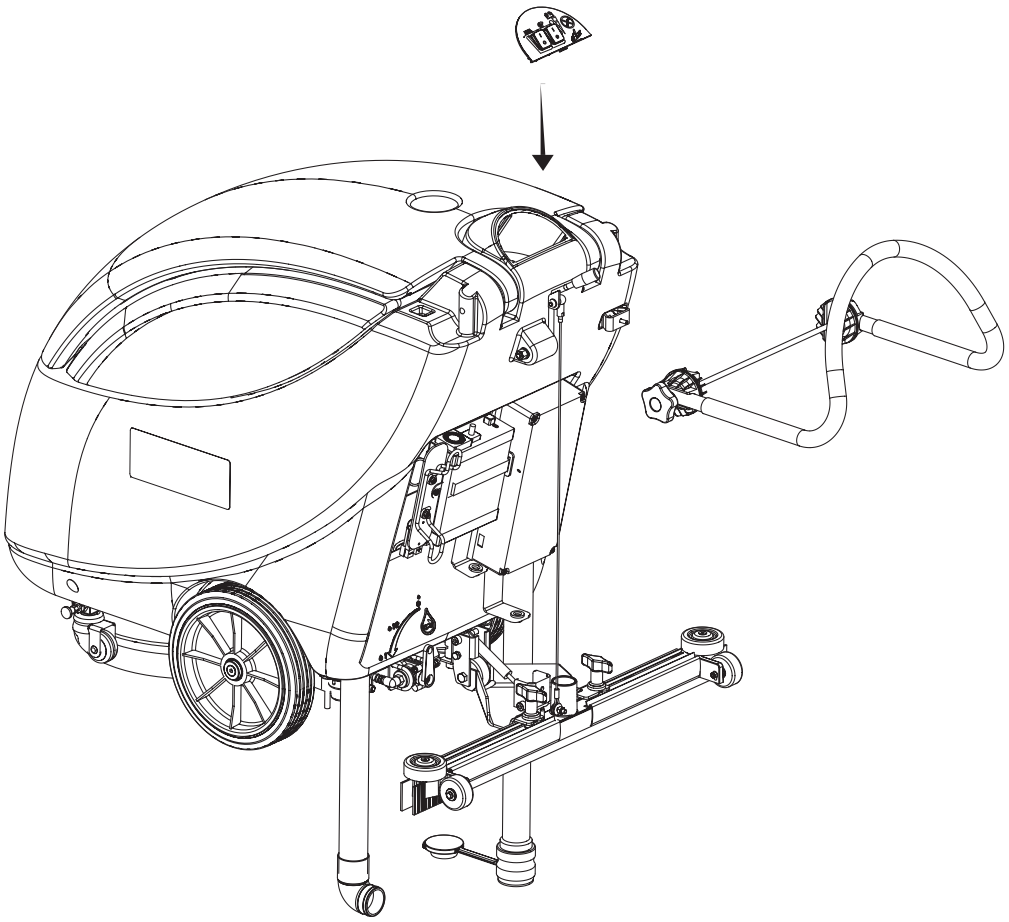

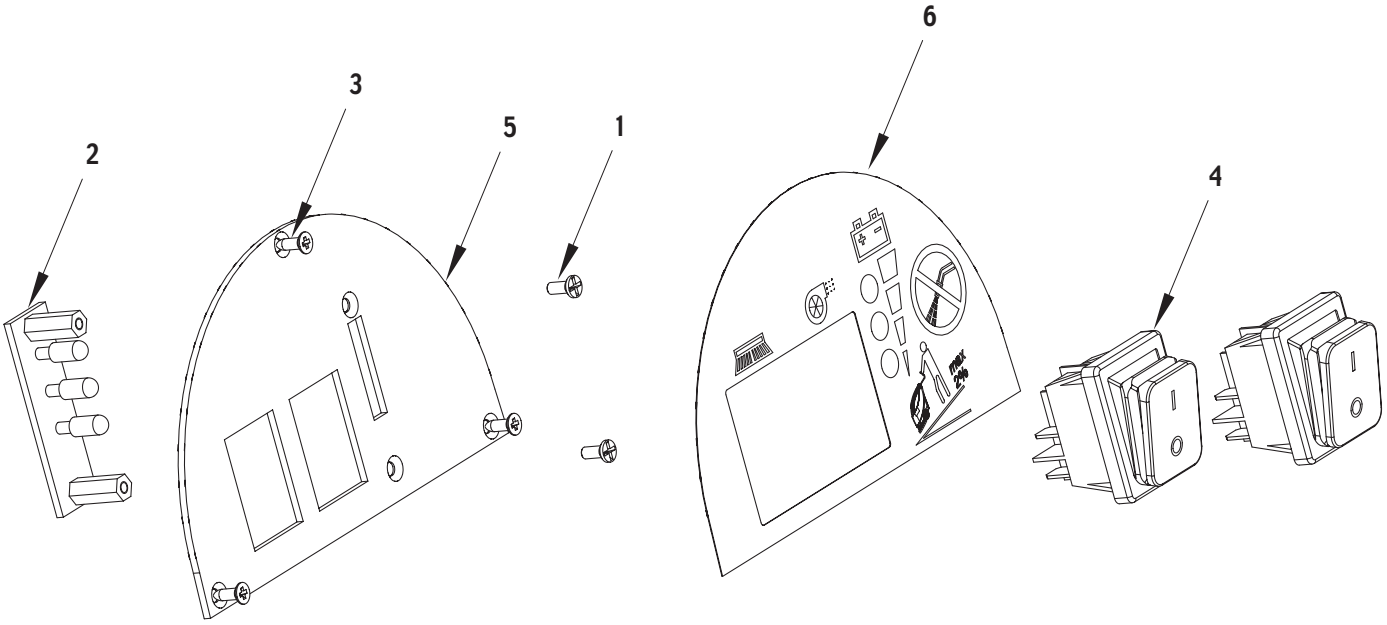
6
3
5
1
2
4

Item No.	Ref. No.	Qty	Description
1	08603919	2	Screw M3X8
2	08812909	1	Electronic card
3	145 1756 000	3	Screw M2,9X9,5 SS
4	909 5584 000	2	Switch
5	909 6275 000	1	Control panel
6	909 6282 000	1	Decal control panel

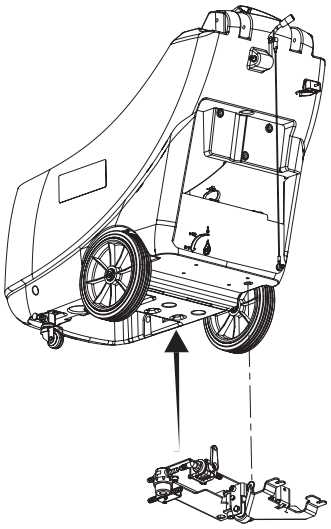

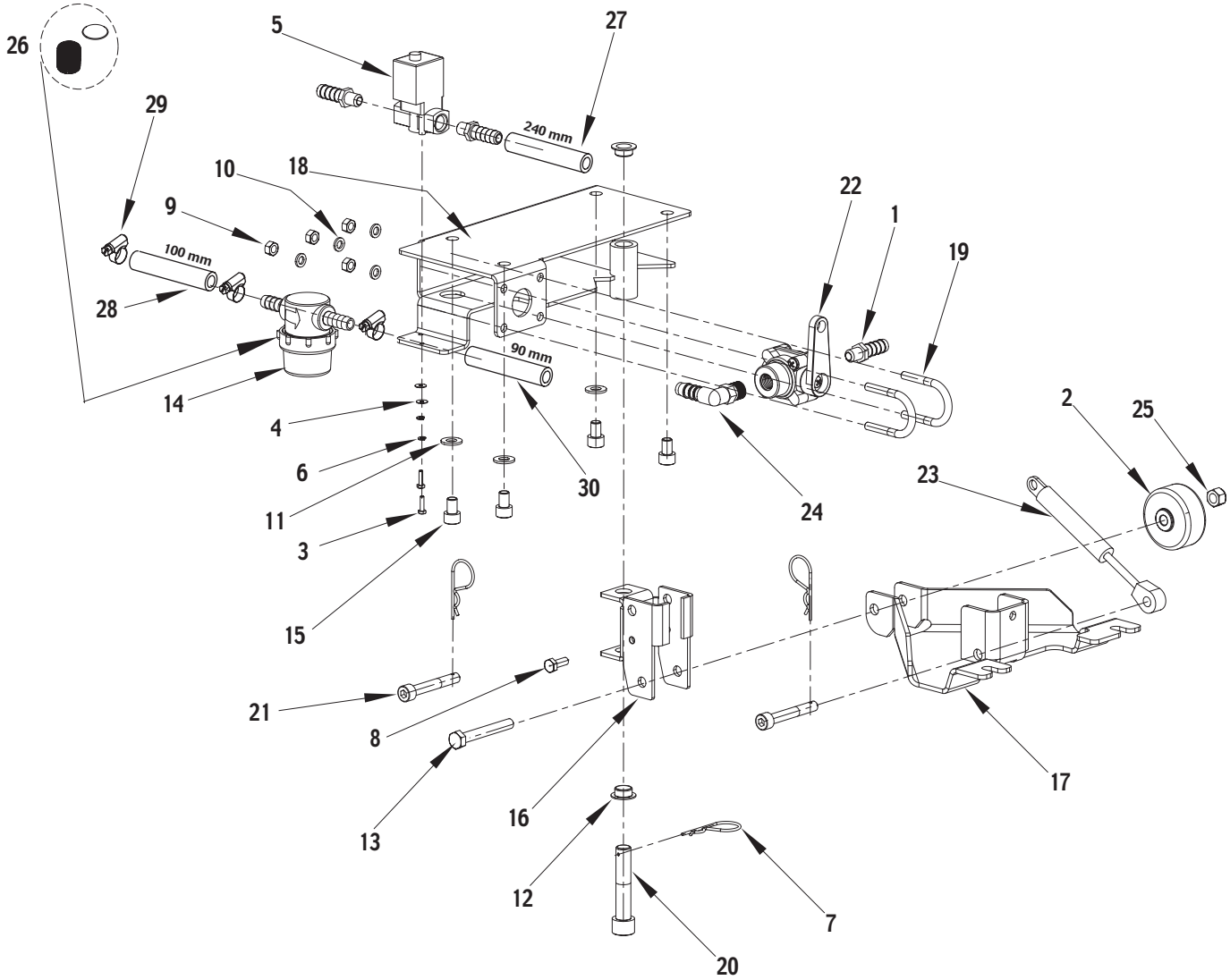
26
5
27
29
240 mm
10
18
22
9
1
19
100 mm
28
90 mm
14
2
25
4
6
30
23
11
24
3
15
21
8
17
13
16
12
7
20

Item No.	Ref. No.	Qty	Description
1	xxxxxxxx	3	Rubber holder (Solenoid valve kit)
2	08603665	1	Wheel
3	xxxxxxxx	2	Screw hex hd M3x12 SS (Solution systems hardware kit)
4	xxxxxxxx	2	Washer flat 3x9 SS (Solution systems hardware kit)
5	08812960	1	Solenoid valve 24V (Solenoid valve kit)
6	xxxxxxxx	2	Washer split 3 SS (Solution systems hardware kit)
7	xxx xxxx xxx	3	Split pin (Solution systems hardware kit)
8	xxx xxxx xxx	1	Screw hex hd M6x16 SS (Solution systems hardware kit)
9	xxx xxxx xxx	4	Nut hex M6 SS (Solution systems hardware kit)
10	xxx xxxx xxx	4	Washer flat 6x12,5 SS (Solution systems hardware kit)
11	xxx xxxx xxx	3	Washer flat 8x17 SS (Solution systems hardware kit)
12	146 0549 000	2	Bushing
13	xxx xxxx xxx	1	Screw hex hd M8x55 SS (Solution systems hardware kit)
14	909 5151 000	1	Kit water filter complete (Solenoid valve kit)
15	xxx xxxx xxx	4	Screw M8x12 (Solution systems hardware kit)
16	909 5566 000	1	Bracket
17	909 5567 000	1	Support
18	909 5571 000	1	Plate
19	xxx xxxx xxx	2	Clamp (Solution systems hardware kit)
20	xxx xxxx xxx	1	Screw M12x60 SS (Solution systems hardware kit)
21	xxx xxxx xxx	2	Screw M8x55 SS (Solution systems hardware kit)
22	xxx xxxx xxx	1	Valve (Solenoid valve kit)
23	909 5637 000	1	Spring
24	xxx xxxx xxx	1	Rubber holder (Solenoid valve kit)
25	xxx xxxx xxx	1	Nut hex low self lock M8 SS (Solution systems hardware kit)
26	08603893	1	Kit filter net with gasket
27	xxx xxxx xxx	1	Hose ø10 240 mm (Solenoid valve kit)
28	xxx xxxx xxx	1	Hose ø10 100 mm (Solenoid valve kit)
29	xxx xxxx xxx	3	Clamp 8/ 9-16 (Solenoid valve kit)
30	xxx xxxx xxx	1	Hose ø10 90 mm (Solenoid valve kit)
[31]	08603885	1	Connector for solenoid valve
[32]	909 5977 000	1	Solenoid valve kit (1,5,14,22,24,27,28,29,30)
[33]	909 5990 000	1	Solution systems hardware kit (3,4,6,7,8,9,10,11,13,15,19,20,21,25)

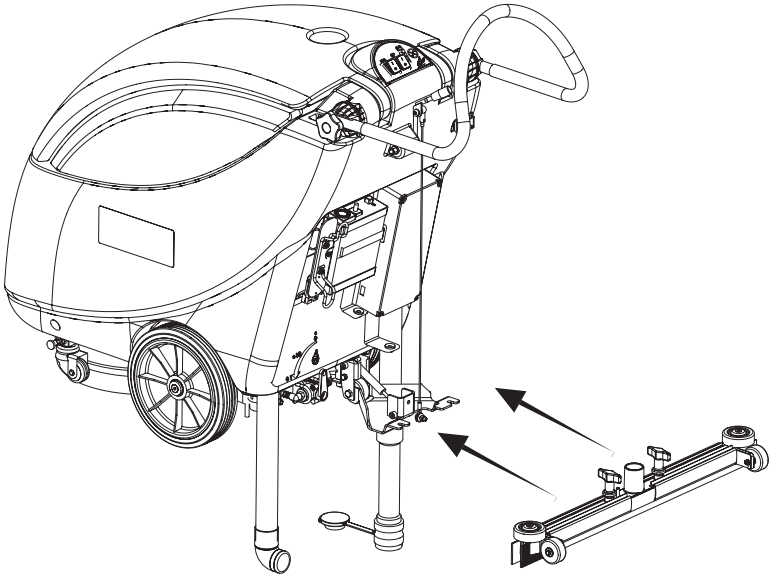

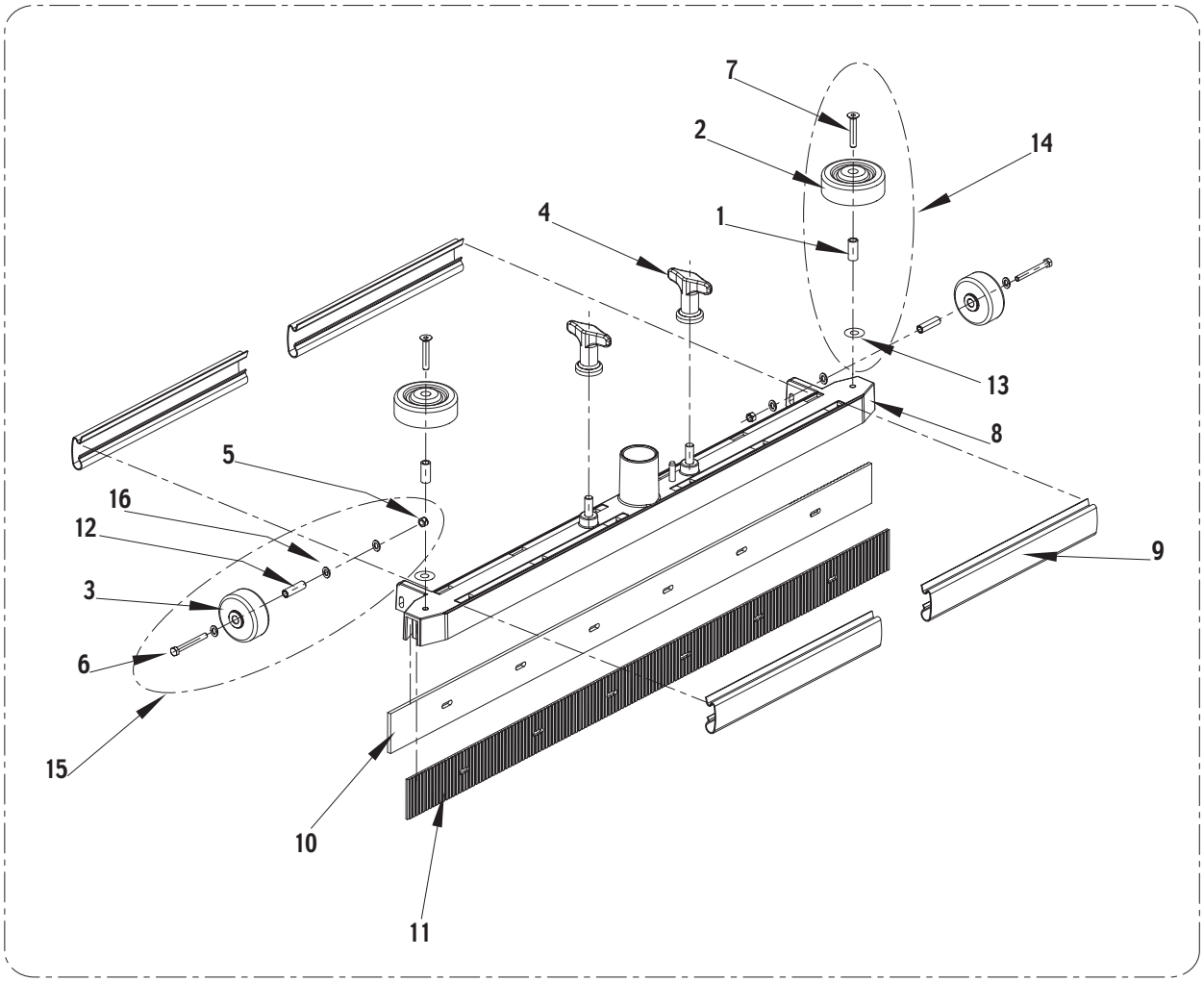

17

Item No.	Ref. No.	Qty	Description
1	xxxxxxxx	2	Spacer (Kit squeegee bumper roller - Kit squeegee complete - Squeegee assembly hardware kit)
2	xxxxxxxx	2	Bumper roller (Kit squeegee bumper roller - Kit squeegee complete - Squeegee assembly hardware kit)
3	xxxxxxxx	2	Squeegee wheel (Kit squeegee wheel - Kit squeegee complete)
4	xxxxxxxx	2	Nut thumb (Kit squeegee complete - Squeegee assembly hardware kit)
5	xxxxxxxx	2	Nut hex low selflock M5 SS (Kit squeegee wheel - Kit squeegee complete - Squeegee assembly hardware kit)
6	xxxxxxxx	2	Screw hex hd M5x45 SS (Kit squeegee wheel - Kit squeegee complete - Squeegee assembly hardware kit)
7	xxxxxxxx	2	Screw M6x35 (Kit squeegee bumper roller - Kit squeegee complete - Squeegee assembly hardware kit)
8	909 5554 000	1	Squeegee weldment (Kit squeegee complete)
9	909 5555 000	4	Spring (Kit squeegee complete)
10	909 5568 000	1	Blade rear (Kit squeegee complete)
11	909 5569 000	1	Blade front (Kit squeegee complete)
12	xxx xxxx xxx	2	Spacer (Kit squeegee wheel - Kit squeegee complete - Squeegee assembly hardware kit)
13	xxxxxxxx	2	Washer flat 6x18 SS (Kit squeegee complete - Squeegee assembly hardware kit)
14	08603880	1	Kit squeegee bumper roller (1,2,7)
15	909 5703 000	1	Kit squeegee wheel (3,5,6,12,16)
16	xxx xxxx xxx	6	Washer flat 5x15 SS (Kit squeegee wheel - Kit squeegee complete - Squeegee assembly hardware kit)
17	909 5702 000	1	Kit squeegee complete (1,2,3,4,5,6,7,8,9,10,11,12,13, 16)
[18]	909 5991 000	1	Squeegee assembly hardware kit (1,2,4,5,6,7,12,13,16)

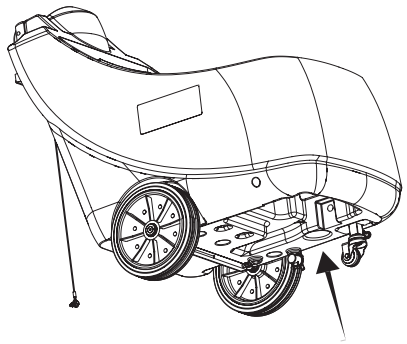

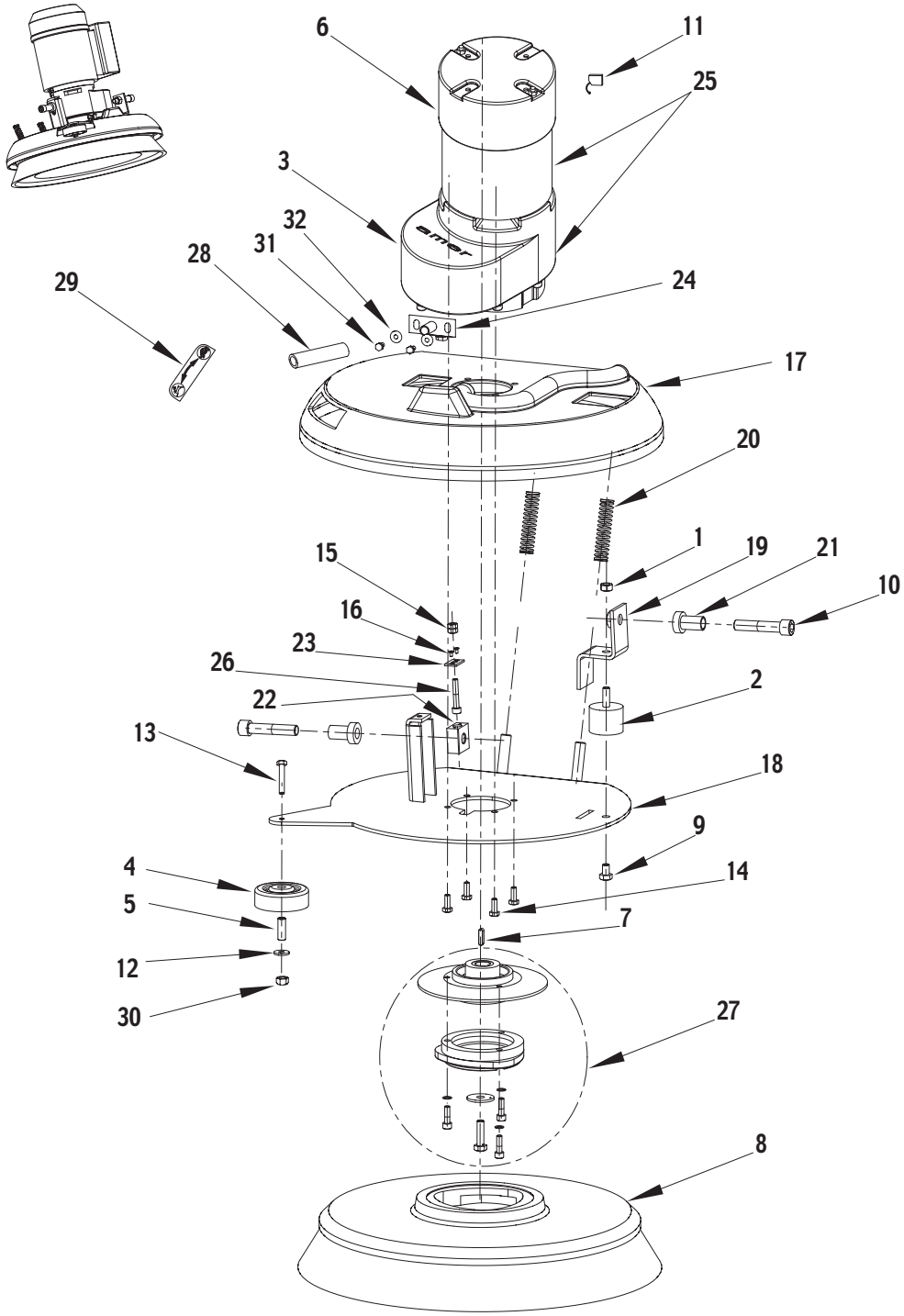
6
11
25
3
32
31
28
29
24
17
20
1
19
21
10
15
16
23
26
22
2
13
18
9
4
14
5
7
12
30
27
8

Item No.	Ref. No.	Qty	Description
1	xxxxxxxx	1	Nut (Brush system hardware kit)
2	56325602	1	Vibration damping
3	08603849	1	Reduction gear
4	56363855	1	Bumper roller
5	08602461	1	Spacer
6	909 5508 000	1	Electric motor
7	xxx xxxx xxx	1	Tab (Brush system hardware kit)
8	08812891	1	Brush ø430 Prolene PPL
8*	909 5691 000	1	Brush ø430 Midlite Grit180
8*	909 5692 000	1	Brush ø430 Midrit 240
8*	909 5693 000	1	Brush ø430 Prolite
8*	909 5694 000	1	Brush ø430 Union mix
9	xxx xxxx xxx	1	Screw hex hd M8x12 (Brush system hardware kit)
10	xxx xxxx xxx	2	Screw M12x55 (Brush system hardware kit)
11	909 5720 000	1	Carbon brush set (4 pcs)
12	xxxxxxxx	2	Washer flat 6x18 (Brush system hardware kit)
13	xxx xxxx xxx	1	Screw M6x40 (Brush system hardware kit)
14	xxx xxxx xxx	4	Screw hex hd M6x16 SS (Brush system hardware kit)
15	xxx xxxx xxx	2	Nut hex M6 SS (Brush system hardware kit)
16	xxx xxxx xxx	2	Screw M3x6 (Brush system hardware kit)
17	909 5550 000	1	Brush protection
18	909 5556 000	1	Plate brush support
19	909 5557 000	1	Bracket
20	909 5558 000	2	Spring
21	909 5559 000	2	Bushing
22	909 5585 000	1	Brush deck adjuster block
23	909 5586 000	1	Plate
24	909 6217 000	1	Hose copper
25	909 5638 000	1	Reductiongearmotor 520W
26	xxx xxxx xxx	1	Screw M6x30 (Brush system hardware kit)
27	08812589	1	Polyg.holder w.flange kit
28	909 5622 000	1	Hose ø10 640 mm
29	xxx xxxx xxx	1	Decal brush adjusting (Kit decals)
30	08361400	1	Nut hex M6 selflock. low
31	146 0632 000	2	Screw hex hd M4x8
32	145 9237 000	2	Washer flat 4x12
[33]	909 5992 000	1	Brush system hardware kit (1,7,9,10,12,13,14,15,16,26)

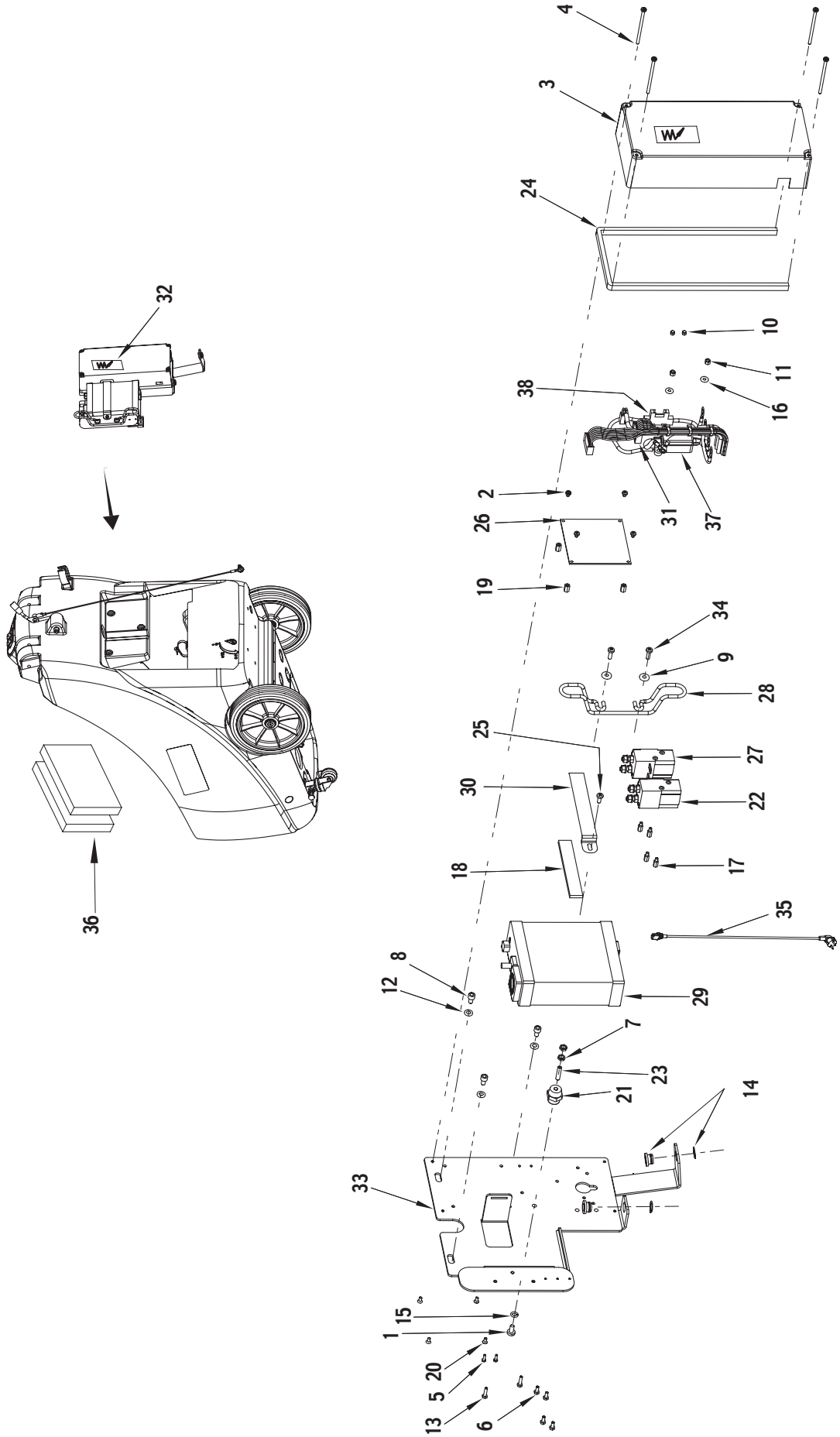
4
3
24
32
10
11
38
16
2
31
37
26
19
34
9
28
25
27
30
22
18
17
35
36
8
12
29
7
23
21
14
33
15
1
20
5
13
6

Item No.	Ref. No.	Qty	Description
1	xxxxxxxx	1	Screw cyl hd M6x12 (Wiring system hardware kit)
2	xxxxxxxx	4	Screw cyl hd M4x6 (Wiring system hardware kit)
3	909 5850 000	1	Cover electronic card
4	xxxxxxxx	4	Screw cyl hd M4x70 (Wiring system hardware kit)
5	xxxxxxxxx	2	Screw hex hd M3x10 (Wiring system hardware kit)
6	xxx xxxx xxx	4	Screw hex hd M4x8 (Wiring system hardware kit)
7	xxx xxxx xxx	2	Nut hex low M6 (Wiring system hardware kit)
8	xxx xxxx xxx	3	Screw M8X16 (Wiring system hardware kit)
9	xxx xxxx xxx	2	Washer flat 5x15 SS (Wiring system hardware kit)
10	xxx xxxx xxx	2	Nut hex selflock M3 (Wiring system hardware kit)
11	xxx xxxx xxx	2	Nut hex selflock M4 (Wiring system hardware kit)
12	xxxxxxxx	3	Washer flat 8X17 (Wiring system hardware kit)
13	xxx xxxx xxx	2	Screw hex hd M4x16 (Wiring system hardware kit)
14	909 6062 000	2	Kit bush cable giude and retaining ring
15	xxx xxxx xxx	1	Washer split (Wiring system hardware kit)
16	xxx xxxx xxx	4	Washer flat 4x9 (Wiring system hardware kit)
17	xxx xxxx xxx	4	Spacer M4 (Wiring system hardware kit)
18	146 0656 000	1	Gasket L=125 mm
19	xxx xxxx xxx	4	Spacer hex (Wiring system hardware kit)
20	146 0658 000	4	Screw M4x8
21	146 0708 000	1	Insulator M6 white
22	909 5127 000	1	Electromagnetic switch24V
23	xxx xxxx xxx	1	Dowel M6x25 (Wiring system hardware kit)
24	146 2118 000	1	Gasket L=750 mm
25	xxx xxxx xxx	1	Screw cyl hd M5x12 SS (Wiring system hardware kit)
26	909 5098 000	1	Electronic card
27	146 0719 000	1	Electromagnetic switch 24V
28	909 5149 000	1	Support battery charger cable
29	909 5561 000	1	Battery charger 100V-230V
30	909 5570 000	1	Bracket for battery charger
31	909 5845 000	1	Harness electronic card
32	xxx xxxx xxx	2	Decal tension (decals kit)
33	909 6302 000	1	Electrical components fitting plate
34	xxx xxxx xxx	2	Screw cyl hd M5x16 (Wiring system hardware kit)
35	909 5783 000	1	Battery charger cable extention
36	56325755	2	Restraint
37	145 8046 000	1	Fuse holder
38	146 0660 000	1	Blade fuse holder
[39]	909 6306 000	1	Machine harness
[40]	145 9852 000	1	Blade fuse 5A
[41]	145 3824 000	1	Brush Strip fuse 40A
[42]	145 8513 000	1	Vaccum blade fuse 30A
[43]	909 5982 000	1	Battery charger power cable
[44]	909 5983 000	1	Battery charger output cable
[45]	909 5984 000	1	Battery charger cooling fan
[46]	56372673	4	Boot battery clamps
[47]	909 5955 000	1	Battery harness
[48]	145 6062 000	1	Battery connector
[49]	xxx xxxx xxx	1	Decal fuse 40A (decals kit)
[50]	xxx xxxx xxx	1	Decal fuse 30A (decals kit)
[51]	909 5994 000	1	Wiring system hardware kit (1,2,4,5,6,7,8,9,10,11,12,13,15,16,17,19,23,25,34)

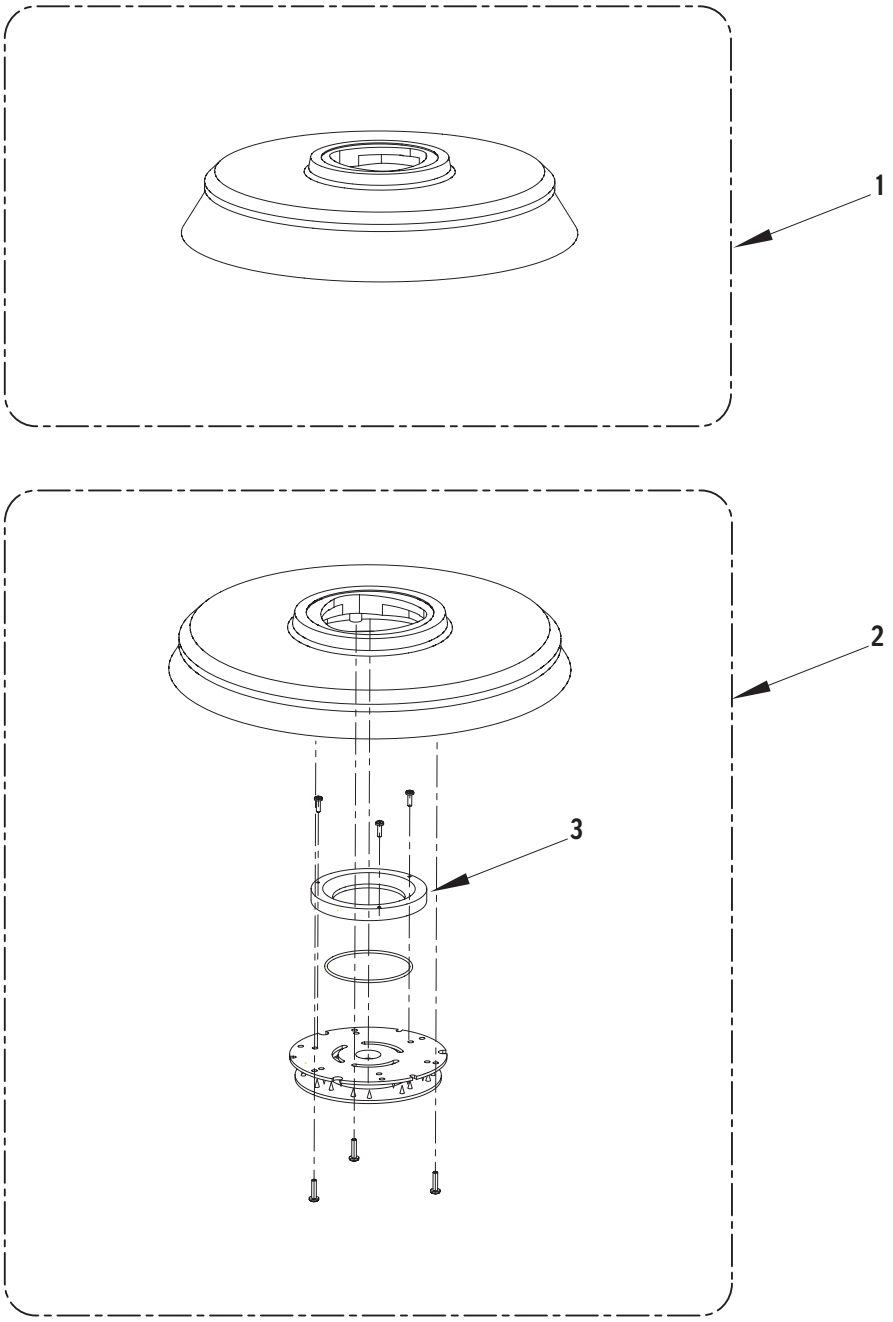
1
2
3

Item No.	Ref. No.	Qty	Description
1*	909 5691 000	1	Brush ø430 Midlite Grit180
1*	909 5692 000	1	Brush ø430 Midrit 240
1*	909 5693 000	1	Brush ø430 Prolite
1*	909 5694 000	1	Brush ø430 Union mix
2*	909 5695 000	1	Pad holder 410
3	08603966	1	Ring nylon

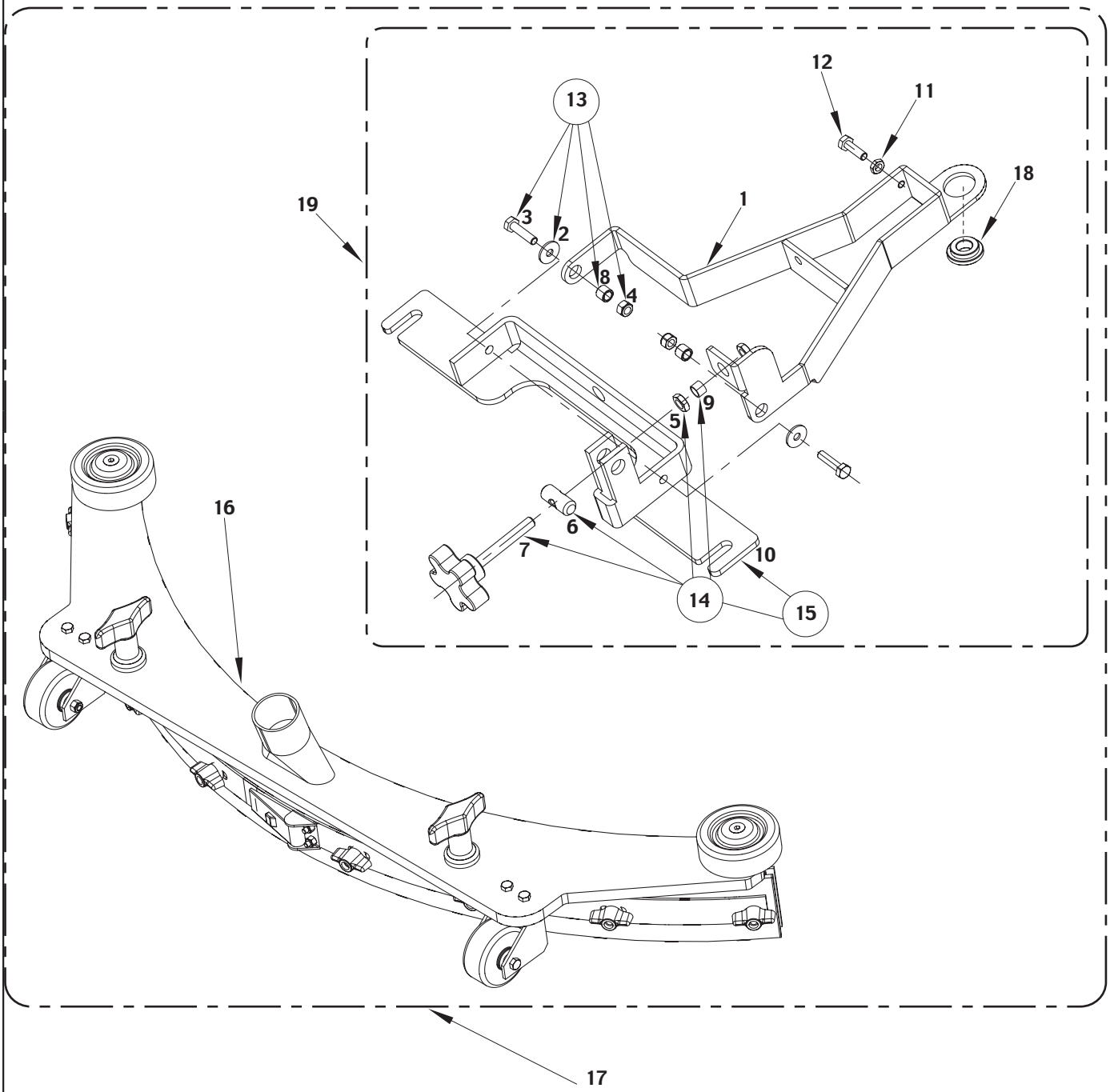
12
11
13
18
19
1
3
2
8
4
9
5
16
6
7
10
14
15
17

Item No.	Ref. No.	Qty	Description
1	909 5914 000	1	Bracket
2	xxxxxxxx	2	Washer flat (fixture nozzle holder left/right kit)
3	xxxxxxxx	2	Screw hex hd M6x25 (fixture nozzle holder left/right kit)
4	xxxxxxxx	2	Nut hex low selflock M6 (fixture nozzle holder lft/right kit)
5	xxxxxxxx	2	Nut hex low M8 (Adjustment screw kit)
6	xxxxxxxx	1	Pin (Adjustment screw kit)
7	xxxxxxxx	1	Knob (Adjustment screw kit)
8	xxxxxxxx	2	Spacer (fixture nozzle holder left/right kit)
9	xxxxxxxx	1	Spacer (Adjustment screw kit)
10	xxxxxxxx	1	Squeegee lower holder (kit squeegee holder)
11	145 4527 000	1	Nut hex low M6
12	145 9227 000	1	Screw hex M6x20
13	08812521	1	Fixture nozzle holder left/right kit (2,3,4,8)
14	08812518	1	Adjustment screw kit (5,6,7,9) (kit squeegee holder)
15	08603876	1	Kit squeegee holder (14,10)
16	08603878	1	Kit squeegee complete
17*	909 6467 000	1	Kit curved squeegee complete
18	909 5915 000	1	Spacer
19	909 6047 000	1	Kit squeegee support
[20]	08602463	1	Squeegee blade front
[21]	08602468	1	Squeegee blade rear
[22*]	08837041	1	Kit oil resistant curved squeegee blades
[23]	909 6450 000	1	Installation instructions

Item No.	Qty	Description
		Solution / Recovery Tank Systems
909 6283 000	1	Squeegee lifting cable
909 6437 000	1	Kit squeegee liting cable
909 5696 000	1	Valve
909 6268 000	1	Gasket
08812869	1	Drain hose
909 6301 000	1	Suction hose
909 6438 000	1	Solution Tank Hardware Kit
909 5988 000	1	Recovery Tank Hardware Kit
		Vacuum System
909 5564 000	1	Pipe acoustic insulation
909 5565 000	1	Pipe acoustic insulation
909 5713 000	1	Kit vacuum motor with connector
909 5371 000	2	Carbon brush
909 5987 000	1	Vacuum System Hardware Kit
		Handle/ Control Panel Assembly
909 5584 000	2	Switch
909 5099 000	1	Handle adjuster kit
909 5701 000	1	Handle adjusting kit
		Solution System
08812960	1	Solenoid valve 24V
909 5151 000	1	Kit water filter complete
08603893	1	Kit filter net with gasket
909 5977 000	1	Solenoid valve kit
909 5990 000	1	Solution System Hardware Kit
		Squeegee System
909 5554 000	1	Squeegee weldment
909 5555 000	1	Spring
909 5568 000	1	Blade rear
909 5569 000	1	Blade front
08603880	1	Kit squeegee bumper roller
909 5703 000	1	Kit squeegee wheel
909 5702 000	1	Kit squeegee complete
909 5991 000	1	Squeegee System Hardware Kit
		Brush System
56325602	1	Vibration dumping
56363855	1	Bumper roller
08812891	1	Brush ø430 Prolene PPL
909 5720 000	1	Carbon brush set (4 pcs)
909 5558 000	2	Spring
909 5638 000	1	Reductiongear motor 520W
909 5992 000	1	Brush System Hardware Kit
		Wiring system
146 0719 000	1	Electromagnetic switch 24V
909 5098 000	1	Electronic card
909 5127 000	1	Electromagnetic switch 24V
909 5561 000	1	Battery charger 100-230V
909 6062 000	2	Kit bush cable guide and retaining ring
909 5994 000	1	Wiring System Hardware Kit

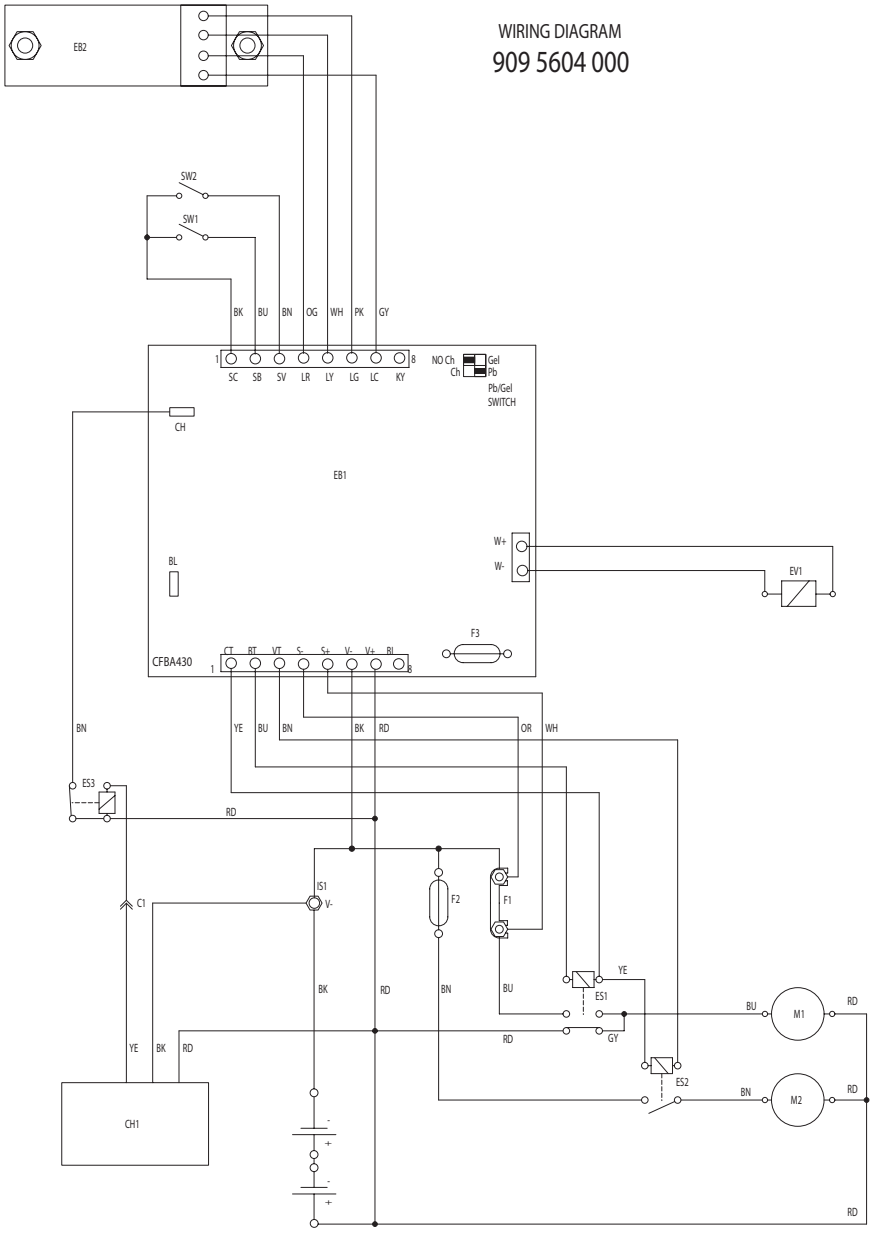

LEGENDA	
CH1	BATTERY CHARGER 909 5561 000
C1	CHARGER OUTPUT CONNECTOR included in 909 5561 000
EB1	ELECTRONIC CARD (CFBA430) 909 5098 000
EB2	LED CARD (CFBALED) 08812909
ES1	BRUSH ELECTROMAGNETIC SWITCH 909 5127 000
ES2	VACUUM ELECTROMAGNETIC SWITCH 146 0719 000
ES3	CHARGER OUTPUT RELAIS included in 909 5845 000
EV1	SOLENOID VALVE 08812960
F1	BRUSH STRIP FUSE (40A) 145 3824 000
F2	VACUUM BLADE FUSE (40A) 145 0227 000
F3	WATER VALVE & ELECTR. BLADE FUSE (5A)145 9852 000
IS1	NEGATIVE INSULATOR 146 0708 000
M1	REDUCTION GEAR MOTOR 909 5638 000
M2	KIT VACUUM MOTOR W/ CONNECTOR 909 5713 000
SW1	BRUSH SWITCH 909 5584 000
SW2	VACUUM SWITCH 909 5584 000

KENT

Simple. Clean.

14600 21st Avenue North
Plymouth, MN, 55447-3408
www.kenteuroclean.com
Phone: 800-334-1083
Fax: 866-261-4779
©2005 Printed in Italy